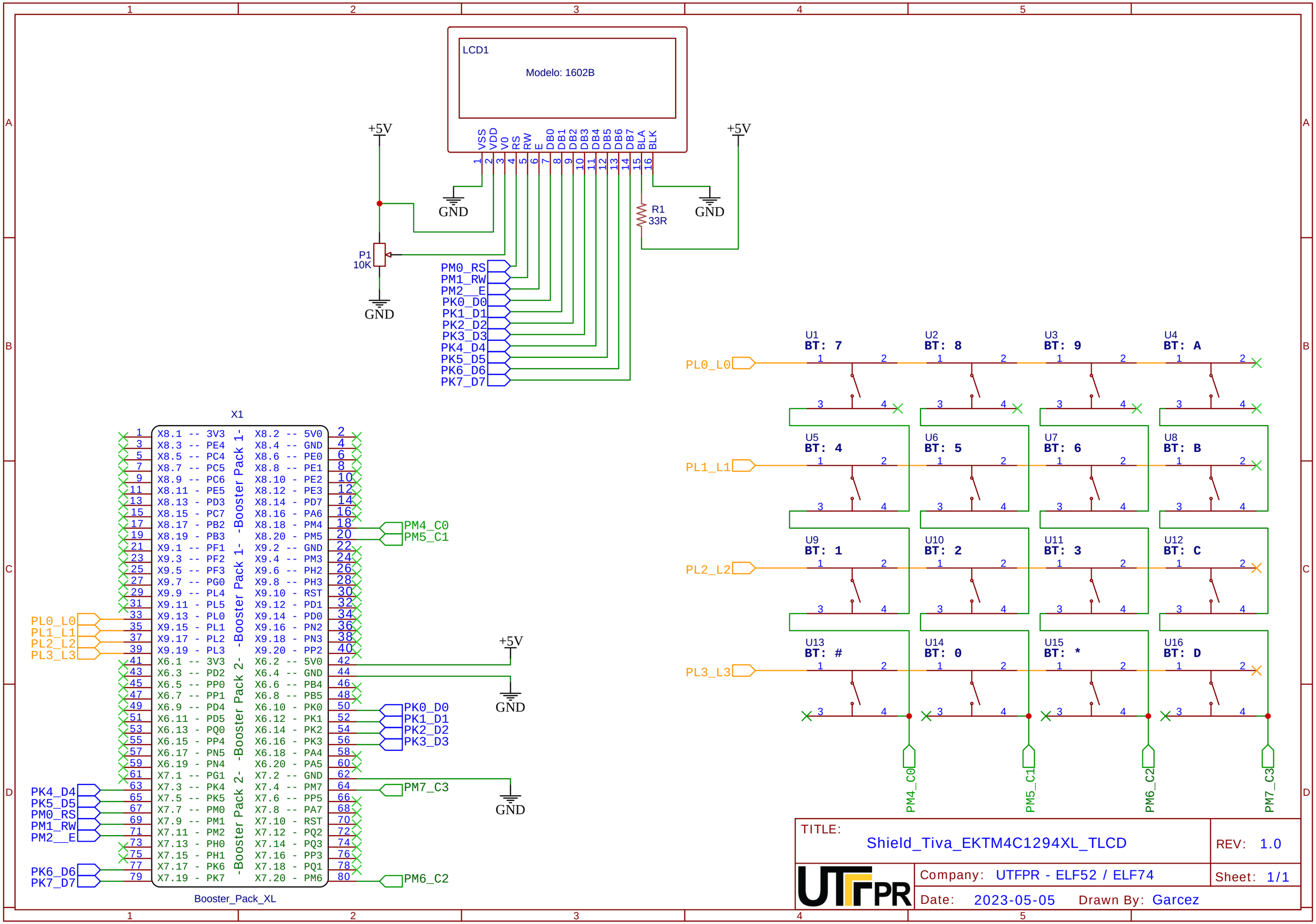
LCD1
Modelo: 1602B
VSS VDD V0 RS RW E DB0 DB1 DB2 DB3 DB4 DB5 DB6 DB7 BLA BLK
+5V
GND
R1
33R
P1
10K
PM0_RS
PM1_RW
PM2__E
PK0_D0
PK1_D1
PK2_D2
PK3_D3
PK4_D4
PK5_D5
PK6_D6
PK7_D7
X1
Booster_Pack_XL
-Booster Pack 1-
-Booster Pack 2-
PL0_L0
PL1_L1
PL2_L2
PL3_L3
PM4_C0
PM5_C1
PM6_C2
PM7_C3
U1 BT: 7
U2 BT: 8
U3 BT: 9
U4 BT: A
U5 BT: 4
U6 BT: 5
U7 BT: 6
U8 BT: B
U9 BT: 1
U10 BT: 2
U11 BT: 3
U12 BT: C
U13 BT: #
U14 BT: 0
U15 BT: *
U16 BT: D
TITLE: Shield_Tiva_EKTM4C1294XL_TLCD
REV: 1.0
Company: UTFPR - ELF52 / ELF74
Sheet: 1/1
Date: 2023-05-05
Drawn By: Garcez